Data sheet

DST2-QNOD-GB0 RNN5 / 07.02.2017 - V 2.0

Network node Q node 5

The network node **Q node 5** receives and processes the data from consumption metering devices within the **Q AMR** system.

The network node works extremely well in more complex building environments.

Integration in the high-end system **Q AMR** via the PC radio module WTZ.RM permits the wireless readout of AMR systems, monitoring during installation and determination of the optimum installation point for the network node.

Network nodes of the type RNN5000M0x are battery-operated. There is a mains-operated version RNN5000M1x available.

Functions

- Reception and storage of data from the consumption metering devices
- Automatic set-up of a network comprising up to 12 x Q node 5 (up to max. 500 consumption metering devices)
- Distribution of all relevant consumption values to all Q node 5 within a network
- Copy mode to transfer data (device list incl. passwords and statistic values) of a node within a network to a new node
- Delete mode (in installed state) to remove devices to be replaced from the system list
- IrDA teach and delete mode to add or remove new devices to or from a system and to synchronise the device list.
- AES encryption
- Firmware update via USB adapter

The network nodes Q node 5 are made up of the following components:

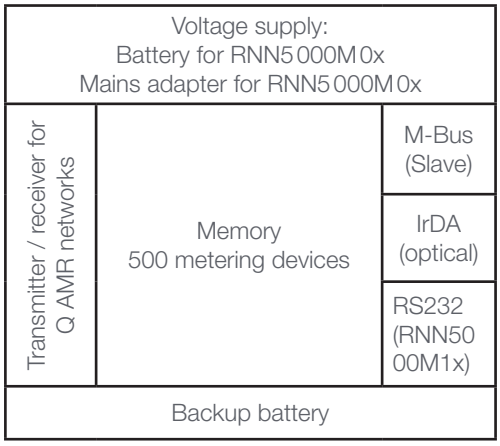

Transmitter and receiver are used for recording the data from consumption metering devices and forwarding these to other network nodes in the same network. The transmitter is used for communication with other network nodes. The data memory contains the measuring data from the consumption metering devices. It is protected against temporary power failure, for instance during mains power failure or replacement of the main battery, by the backup battery.

Type summary

The network node Q node 5 is part of the Q AMR system and can only be used with this.

Execution	Article number
Standard, battery-operated	RNN5 000M 0x
Standard, mains-supplied	RNN5 000M 1x

Accessories

Product description	Article number
USB programming adapter	RNNP H001 0010

Further notes

Further notes about the Network node Q node 5 can be found in the installation and operating manual as well as in the Q AMR system manual.

M-Bus connection

The M-Bus can be connected permanently (fixed installation) to each network node with the aid of a connector. The connector is included in the scope of supply. There is an additional plug connector available for temporary connection (e.g. during service).

Optical IrDA interface

Every network node Q node 5 is equipped with an IrDA interface. This is permanently active and used for servicing with commissioning tools or for data exchange with other IrDA-capable QUNDIS products. If the network node itself is to take over the function of the IrDA-Master (e.g. during data exchange with a metering device), the IrDA-Master mode must be started manually.

Technical data

Energy supply / power		
Type RNN5000M0x		
Current supply main and backup battery		Rated voltage: DC 3.6 V
Lifetime of main battery		> 5 years (with factory settings)
Lifetime of backup battery		> 10 years
Type RNN5000M1x		
Rated voltage		AC 100..240 V 50/60 Hz
Frequency band		868.00 MHz – 870.00 MHz
Transmission power		< 14 dBm
Duty cycle		< 1 %
Ambient conditions		
during transport		in non-ventilated containers: -25…+70 °C in ventilated containers: -25…+40°C Relative air humidity: max. 95% at 40°C
during storage		-5…+45 °C Relative air humidity: max. 95%
during operation		5…+55 °C Relative air humidity: max. 95%
Dimensions and weight		
Dimensions		see drawing
Weight	RNN5000M0x: RNN5000M1x:	gross: 0.760 kg, net: 0.648 kg gross: 0.745 kg, net: 0.633 kg
Standards and norms		
CE conformity		yes
Protection rating		IP 20
Safety class	RNN5000M0x: RNN5000M1x:	III II
Electromagnetic compatibility		EN 301 489-1, EN 301 489-3, EN 301 489-7
Type-tested and conform with		R&TTE directive (valid until 12.06.2016) RED directive (applicable from 13.06.2016)

Dimensional drawing

RNN5000M0x

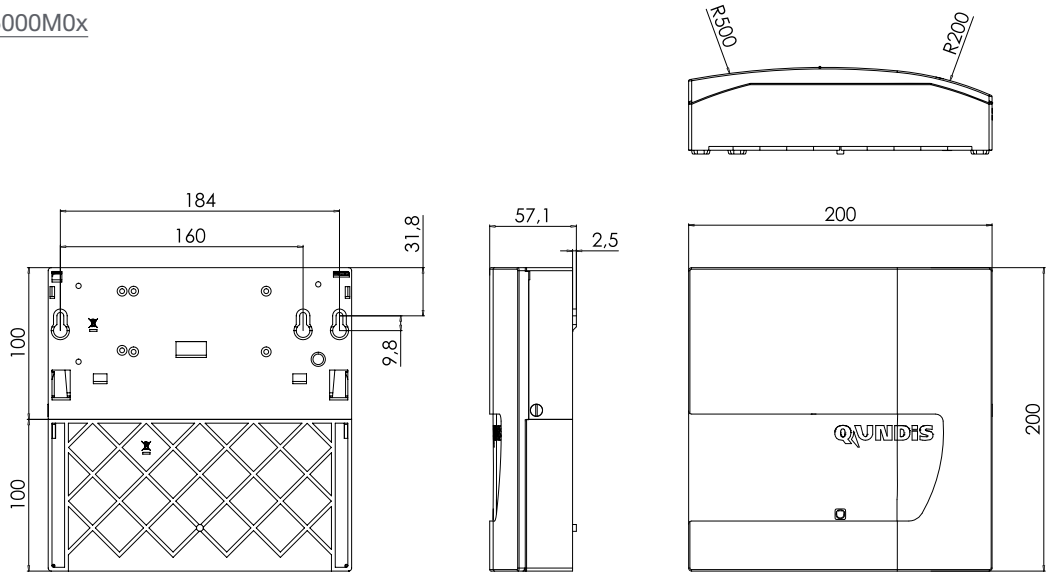

RNN5000M1x

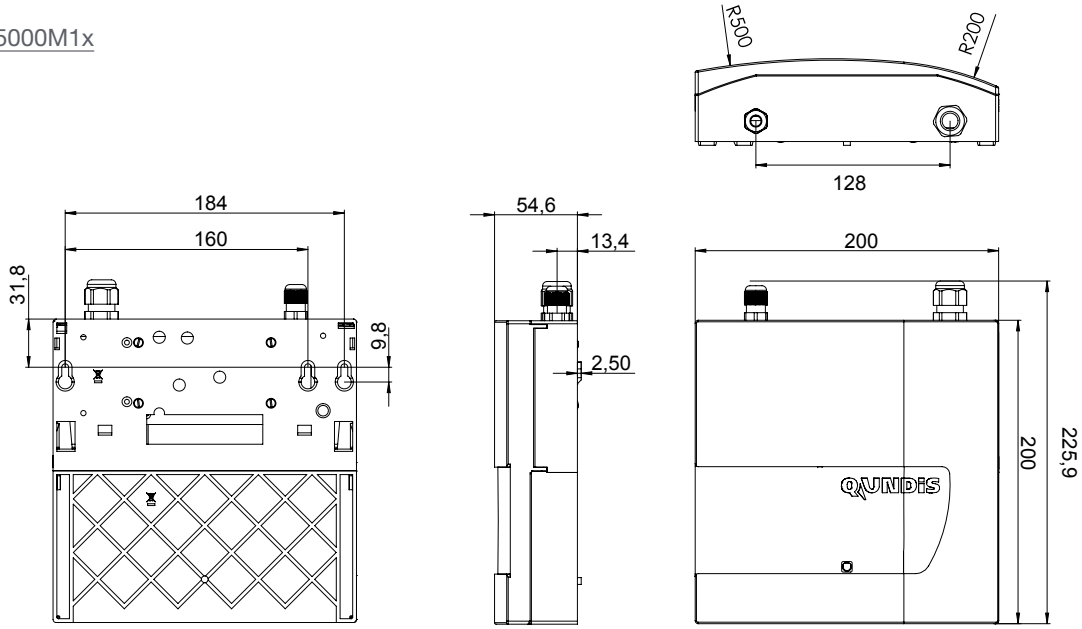

QUNDIS GmbH
Sonnentor 2
D-99098 Erfurt
+49 (0) 361 26 280-0
+49 (0) 361 26 280-175
info@qundis.com
www.qundis.com

The information in this data sheet only contains general descriptions or product characteristics, which may not always apply in particular application cases and/or may be subject to change through further development of the product. Required product characteristics are then binding if they are expressly agreed when the contract is drawn up.
©2017 QUNDIS GmbH. Subject to change