Data sheet

DST1-QMOD-GB0 RWMMO / 11.07.2016 - V 3.0

Q module 5.5 water Modularis

Add-on radio module for QUNDIS water meters and external water meters prepared for wireless transmission

The add-on radio module records and processes the counting pulses of mechanical water meters prepared for wireless transmission and transmits the data to a readout system. The add-on radio module is equipped with an optical interface for parameter setting.

Application

The add-on radio modules **Q module 5.5 water Modularis** are part of the Q AMR and Q walk-by systems. They are used where mechanical water meters prepared for wireless transmission are available, the data of which are to be recorded within one of these systems.
These can be meters for hot or cold water.

Functions

- Recording the counting pulses of the mechanical water meter prepared for wireless transmission the add-on module is fixed to
- Detection of reverse flow
- Monitoring pulse recording
- Processing the pulses and storing current consumption data, statistics values and due date values
- Readout via radio and transmission of the consumption values to a readout unit without direct access to the device
- The radio module does not have its own display
- The transmission period is always given as CET (winter time) the whole year round

Stored data

- Current consumption value
- Due date value
- Due date
- 13 monthly values
- Error code
- Error date

Radio (wireless) features S-mode

- Increased radio capacity
- Radio system – parallel transmission of walk-by and AMR data telegrams
- Transmission delay (offset)
  Time delay for sending telegrams after the due date or at the beginning of the moth in days (standard = 0 days)
- Transmission-free day
  A maximum of 2 days from Friday, Saturday and Sunday can be defined as transmission-free days
  At least 1 day must be set (standard = Sunday).

Transmission behaviour

walk-by(*)	**AMR**
every 128 seconds	every 4 hours
10 hours per day (8 am - 6 pm)	24 hours per day
monthly: 4 readout days from the first of each month	7 days per week
annually: 48 hours after due date	365 days per year
current consumption values 13 Statistical values	Data telegrams only or statistics and consumption values

(*) Compatible with WFU16x / transmission delay or transmission-free days for walk-by only available in S-mode.

Radio (wireless) features C-mode

- Radio system – parallel transmission of walk-by and OMS data telegrams
- Increased radio capacity in C-mode (10 dBm)

Transmission behaviour

walk-by(1)	**OMS**(2)
every 112 seconds	every 7.5 minutes
10 hours per day (8 am - 6 pm)	24 hours per day
365 days per year	365 days per year
current consumption values 13 Statistical values	current consumption values

(1) For this, you need the mobile data collector Q log 5.5 and the readout software ACT46.PC V1.7.2
The readout software can be downloaded from http://qdc.qundis.com.
(2) OMS "Open Metering System" communication architecture for intelligent meters for different manufacturers and branches.

Type summary

System	**Article number**
Q walk-by, Q AMR - S-mode	RWM5 000N 0000 xxxx x
Q walk-by, OMR - C-mode	RWM5 000T 0000 xxxx x

Ordering

The complete article number must be given for the order.

Device combination

One add-on radio module is required per mechanical water meter prepared for wireless transmission.
The Modularis counter is used both by QUNDIS and by other water meter manufacturers, which means that the Q module 5.5 water Modularis can also be used for these:

Manufacturer	**Water meter series**
QUNDIS GmbH	WFx30, WMx10
Deltamess DWWF GmbH1)	Koax 2" Radio V
Wasser-Geräte GmbH1)	Unimeter flush-mounted counter
Maddalena1)	CD SD PLUS EVO

1) There are no tests and certificates. We assume no function guarantee.

Technical data

General device data	
Rated voltage	DC 3 V
Service life	12 years + 12 months reserve
Data transmission according to	EN 13757/4
Frequency band S Mode C Mode	 868.3 MHz 868.95 MHz
Transmission power	Typically 10 dBm
Duty cycle	< 1 % (50ms/128 s)
Impulse value	1 litres
Permissible ambient temperature during transport (2K3) during storage (1K3) during operation (3K4)	 -25 °C to max. +70 °C -5 °C to +45 °C +5 °C to +40 °C

Standards and norms	
EU Conformity	2014/53/EU Radio Equipment Directive (RED) 2011/65/EU Restriction of the use of certain hazardous substances (RoHS)
Protection rating	IP 65
Protection class	III
Radio Electromagnetic compatibility Security of IT equipment	ETSI EN 300 220-1 V2.4.1, ETSI EN 300 220-2 V2.4.1 DIN EN 61000-6-3 : 2007 + A1 : 2011 DIN EN 61000-4-2 : 2009 DIN EN 61000-4-3 : 2006 + A1 : 2008 + A2: 2010 EN 60950-1: 2006 + A2:2013

Dimensional drawing

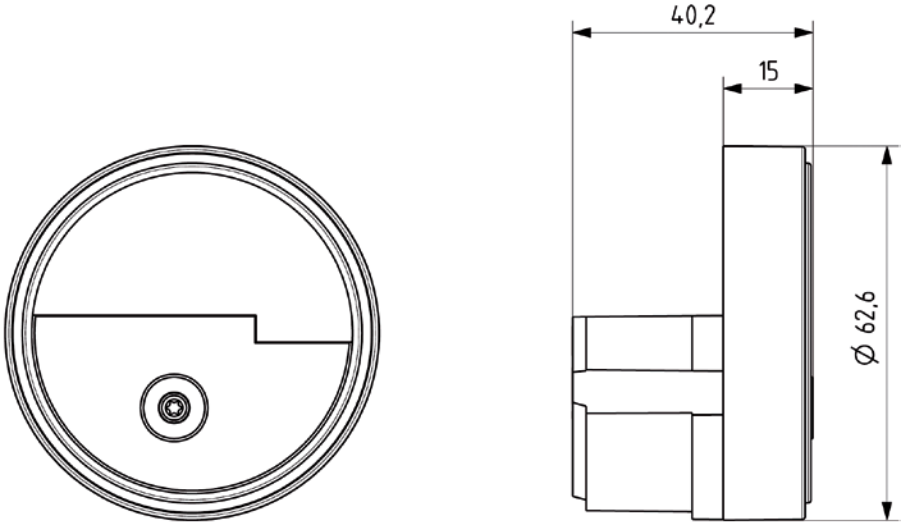

QUNDIS GmbH
Sonnentor 2
D-99098 Erfurt
+49 (0) 361 26 280-0
+49 (0) 361 26 280-175
info@qundis.com
www.qundis.com

The information in this data sheet only contains general descriptions or product characteristics, which may not always apply in particular application cases and/or may be subject to change through further development of the product. Required product characteristics are then binding if they are expressly agreed when the contract is drawn up.
©2016 QUNDIS GmbH. Subject to change